PREMIER CORNER ENTRY

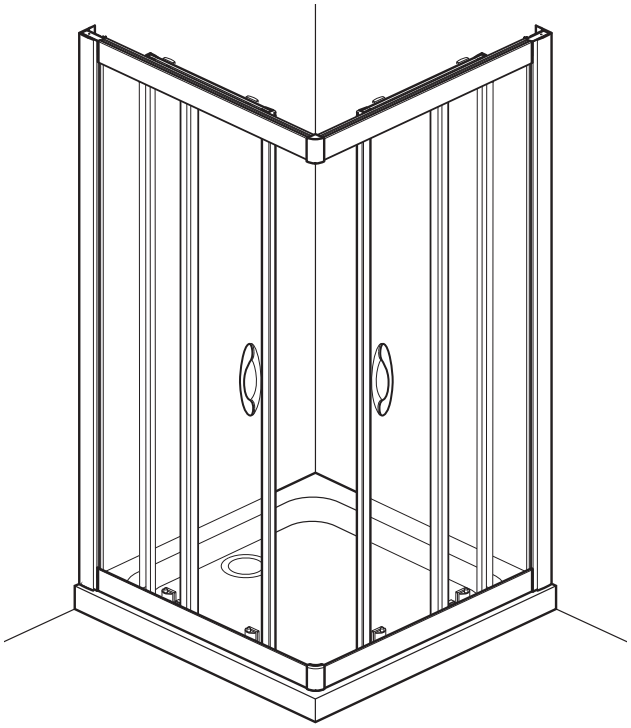

Please read these instructions carefully and keep for future reference.
Incorrect fitting will invalidate the guarantee.

⚠ SAFETY

- Handle glass with great care.
  Although the glass is very tough, sharp impacts can damage both the glass and metal frame.
- Make sure there are no hidden pipes or cables hidden in the wall where you intend to drill.
- Wear safety goggles, shoes and appropriate clothing.

⚠ BEFORE INSTALLATION

- Check that the shower tray is level in all directions. The enclosure will not sit correctly on an uneven surface. If uneven, the wall channels may not fit and the doors may not shut correctly.
- The enclosure should be fitted on tiled walls which are sealed with waterproof grout.
- There must be a good silicone seal between the rim of the shower tray and the wall.
- The shower tray and the enclosure must match in size. Attempting to fit the incorrect size of enclosure to the shower tray will result in water leaks.
- Always check very carefully that components are vertical.
- To avoid damage, use the opened out packaging to build the enclosure on.

Equipment needed:
Drill, 6.5mm Masonry Bit, 4.5mm & 3mm Metal Bits (general), Crosshead Screwdriver, 16mm Spanner, Spirit Level, Pencil, Right Angle, Fine Tooth Saw, Tape Measure, Masking Tape, Silicone Sealant.

Note: The screws and wall plugs supplied are for masonry walls. For lightweight walls i.e. stud partition, plasterboard etc, use the correct type of fixings.

Check contents of pack before installation. If anything is missing, contact our Customer Careline for assistance.

CUSTOMER CARELINE: 01746 713410

PN3230	8		PN60220	2
PN3225 32mm	16		PN50291	2
PN60014 13mm	2		PN50290	2
PN60093 12mm	4		800 = PN40272 900 = PN40273	4
PN3222 10mm	6			
PN50359	6		PN40308	2
PN50370	4		PN40311 PN40312	1/1
PN80618	4		PN40309	2
PN60490	8	PN4745	4	PN60162	1

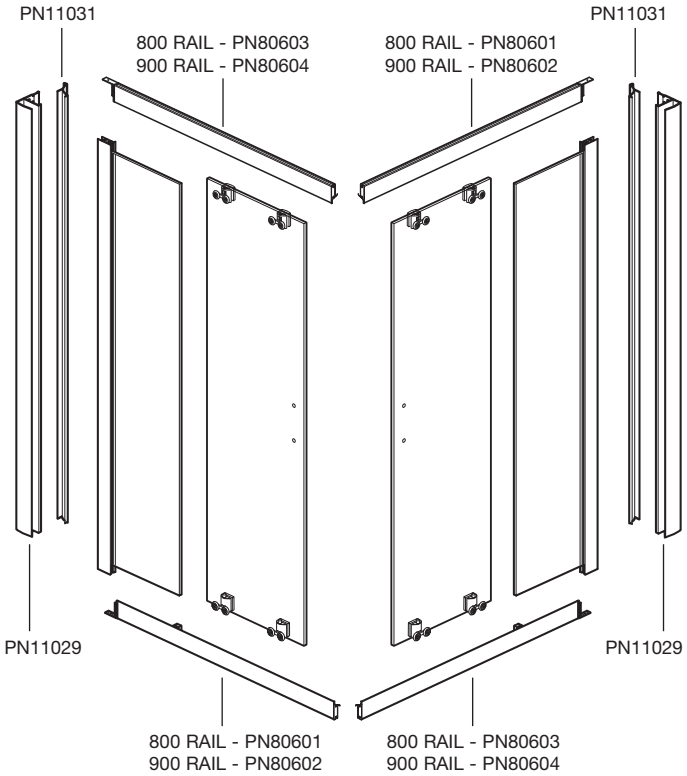

1 **a**

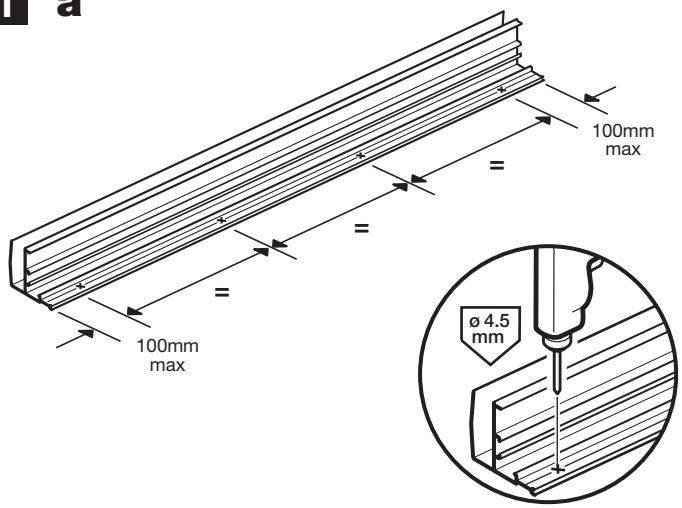

b

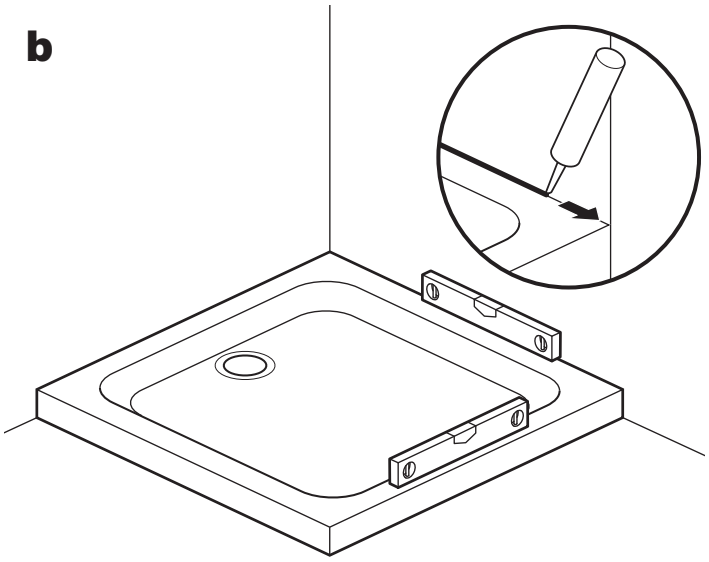

a: Drill holes in both wall channels at the points shown (in the groove) using a 4.5mm drill bit.

b: Ensure the shower tray is level in all directions.

IMPORTANT: Clean the tray and seal the gap between the tray surface and tiles. It is important that the tray is sealed right up to the tray edge so that the bottom of the wall channel is sealed. Failure to do this will cause water to leak under the wall channel and between the tray and tiles, resulting in damp patches on the wall and under the tray.

2

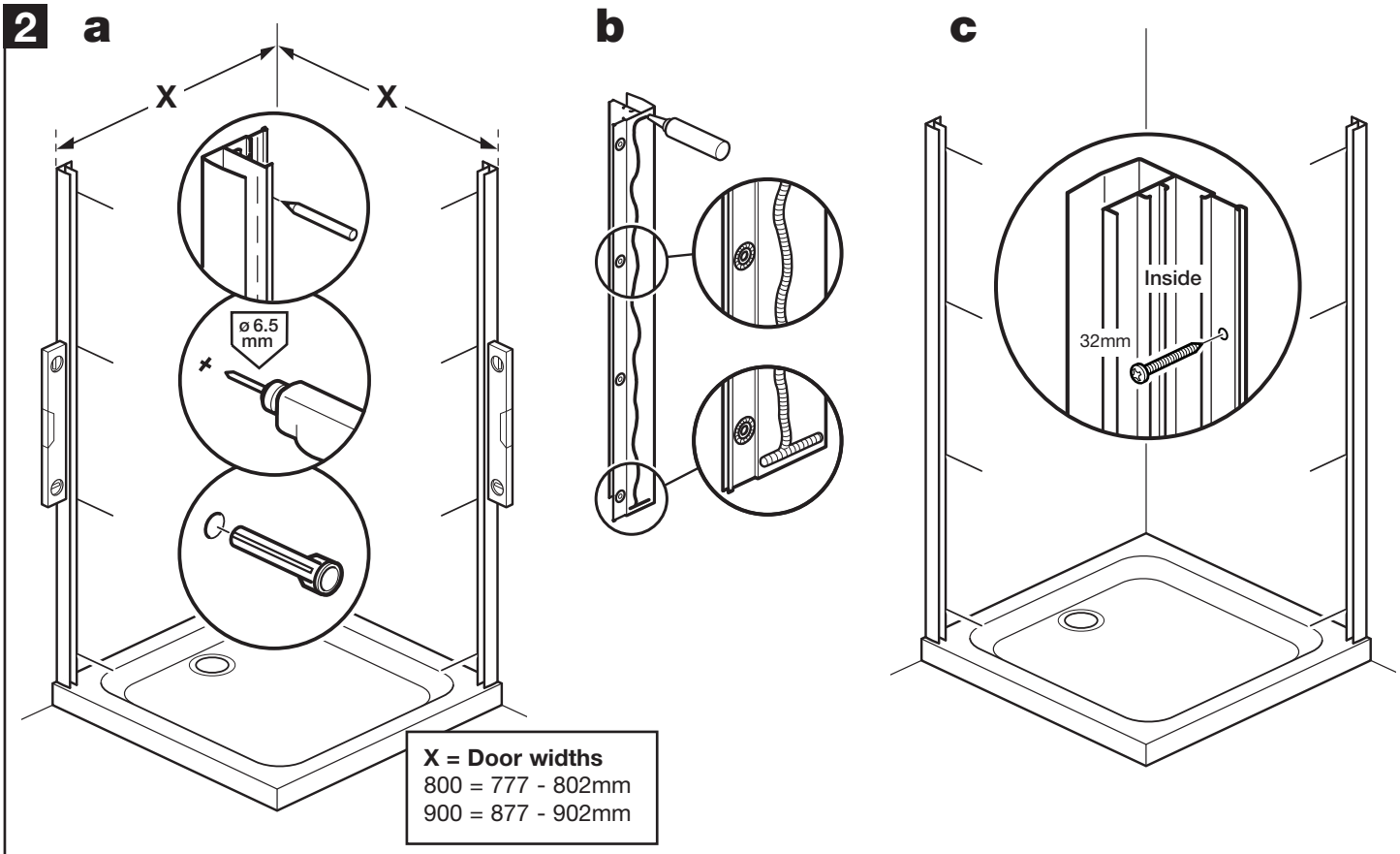

a: Place the wall channels on the tray ensuring they are vertical and an equal distance back from the front of the tray. Place masking tape against the wall before marking drill hole positions, this will help prevent the drill bit slipping. Drill 6.5mm holes, 30mm deep and insert the wall plugs.

b: Apply sealant to the back of the wall channels and around the fixing holes.

c: Fix the wall channels to the walls using 8 x 32mm screws.

3

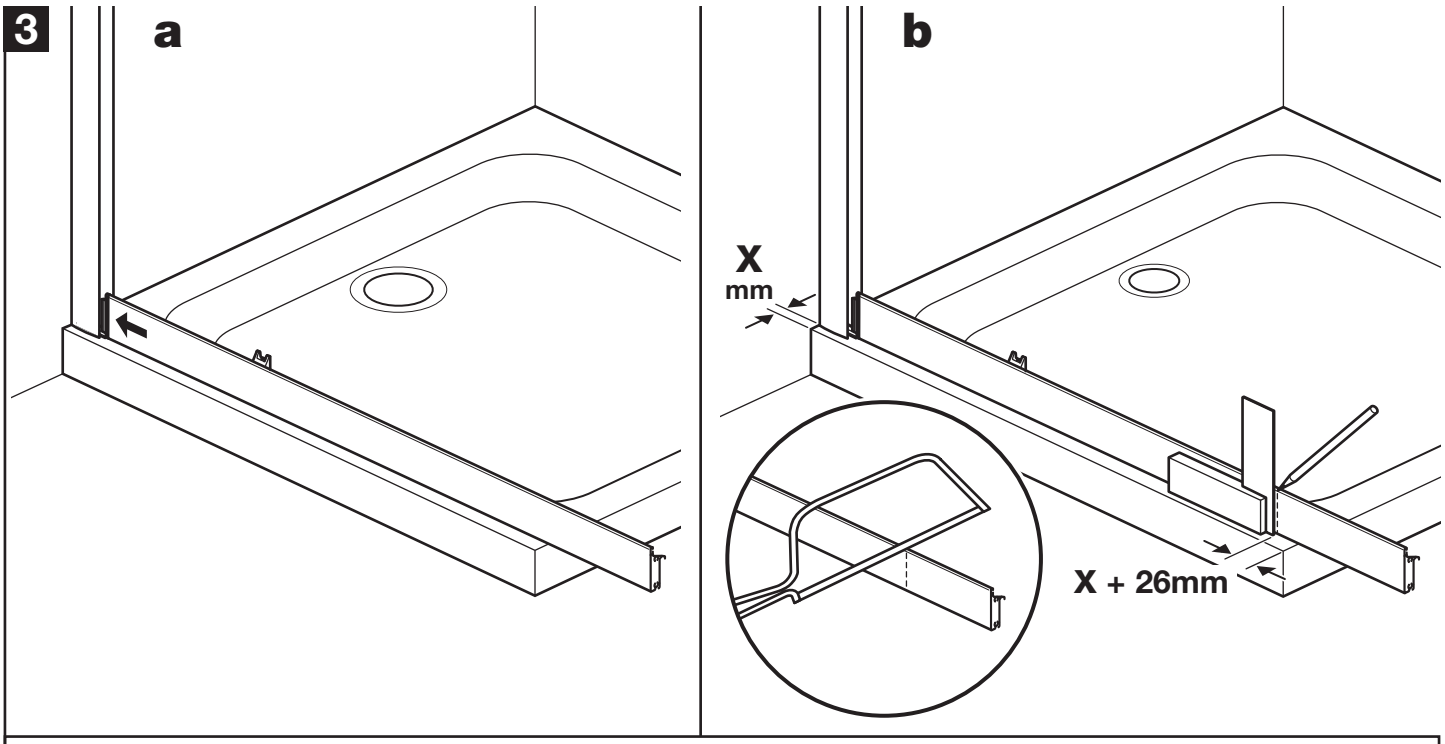

a: Insert a rail into the wall channel as far as it will go.

b: If required measure, mark and cut the rails as shown.
Measure the distance between the wall channel and the edge of the tray (**Xmm**). At the front edge of the tray, measure in from the edge of the tray the distance **X + 26mm** and mark the rail. Carefully cut all 4 rails to this length.

4

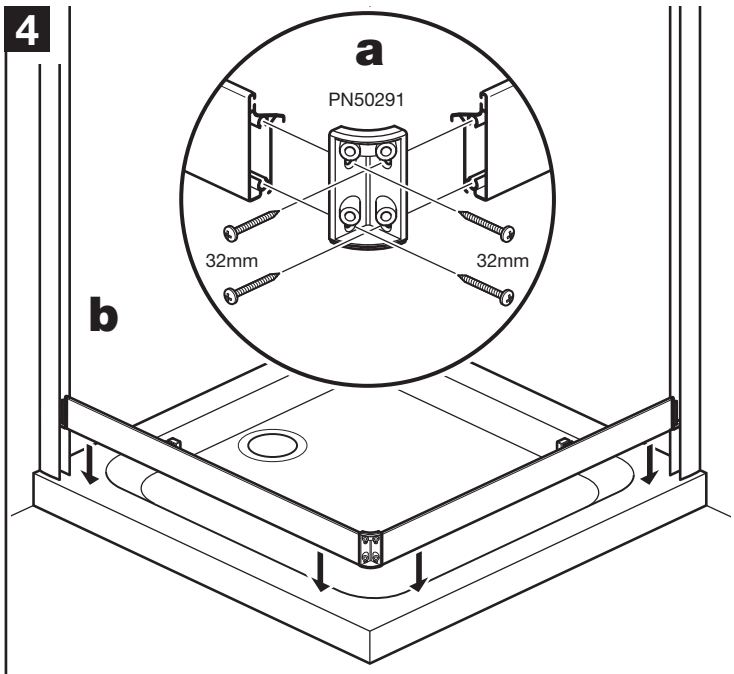

a: Attach corner mouldings (PN50291) onto each pair of rails using 32mm screws.

b: Place the assembled bottom rails onto the tray with its end mouldings fully inserted into the wall channels.

5

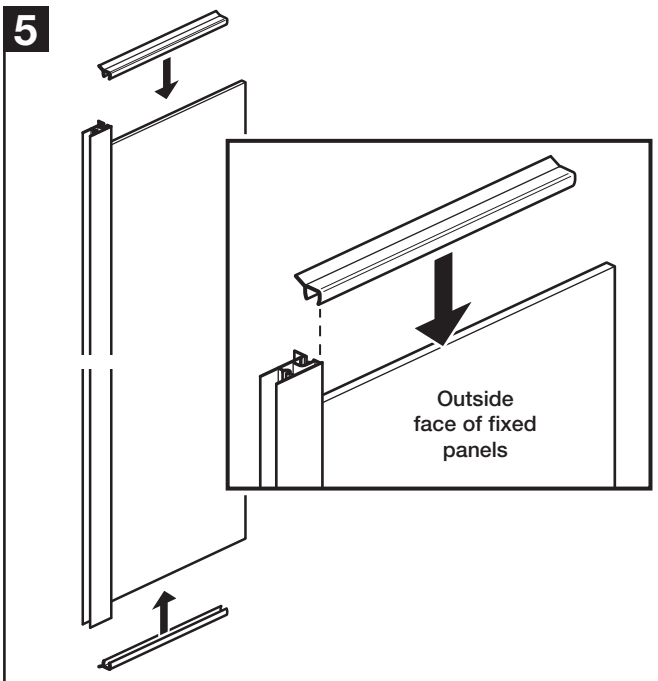

Push fit the 'short flipper seals' onto the top and bottom edges of both fixed panels - flush against the metal profile. **Ensure the flipper seal 'flaps' are on the inside of the fixed panels.**

Note: Wetting the glass with water will help fit the seals.

6

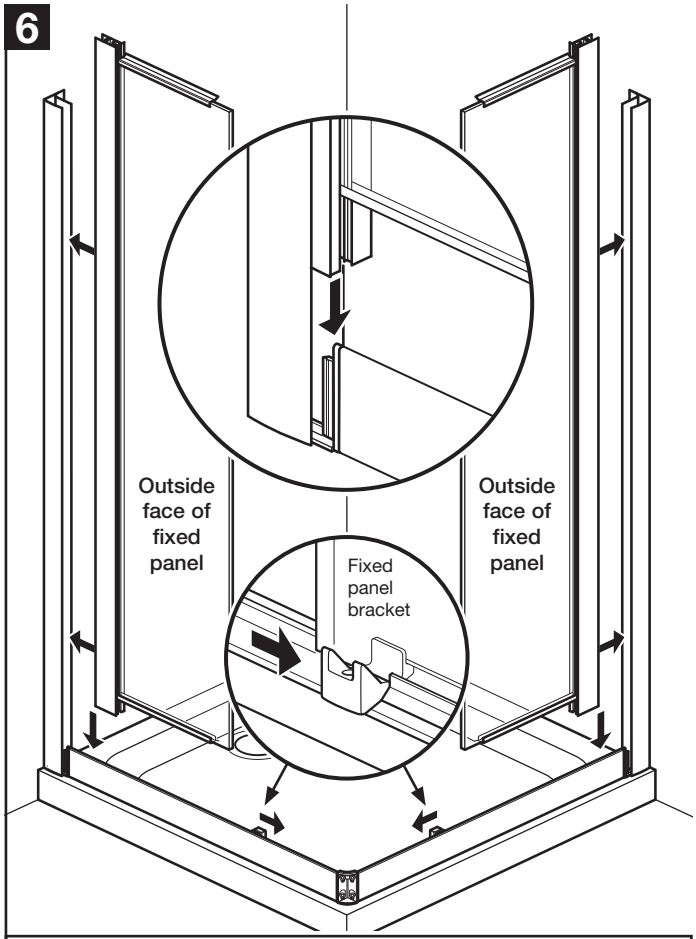

Position the fixed panels into the wall channels and slide down so that they fully slot onto the end mouldings of the bottom rail. Inside the enclosure, ensure the panels sit in the 'fixed panel brackets', slide the fixed panel brackets along the rails and position under the panels as shown.

7

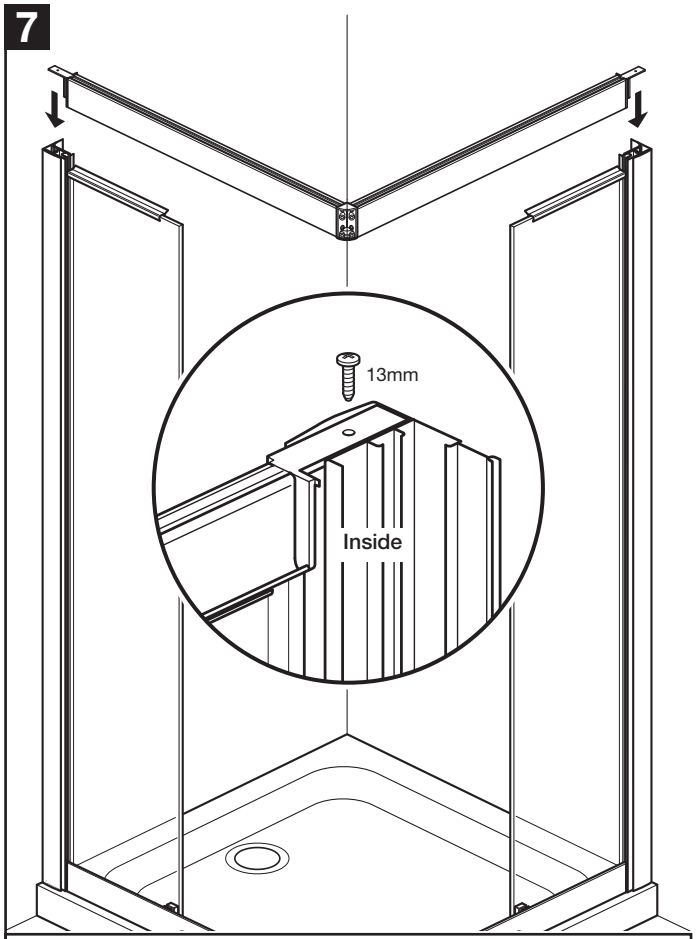

Position the top rail assembly onto the top of the 'fixed panels'. Adjust the position of the fixed panel brackets as required.

Line up the holes and fix the top rail using 2 x 13mm screws.

8

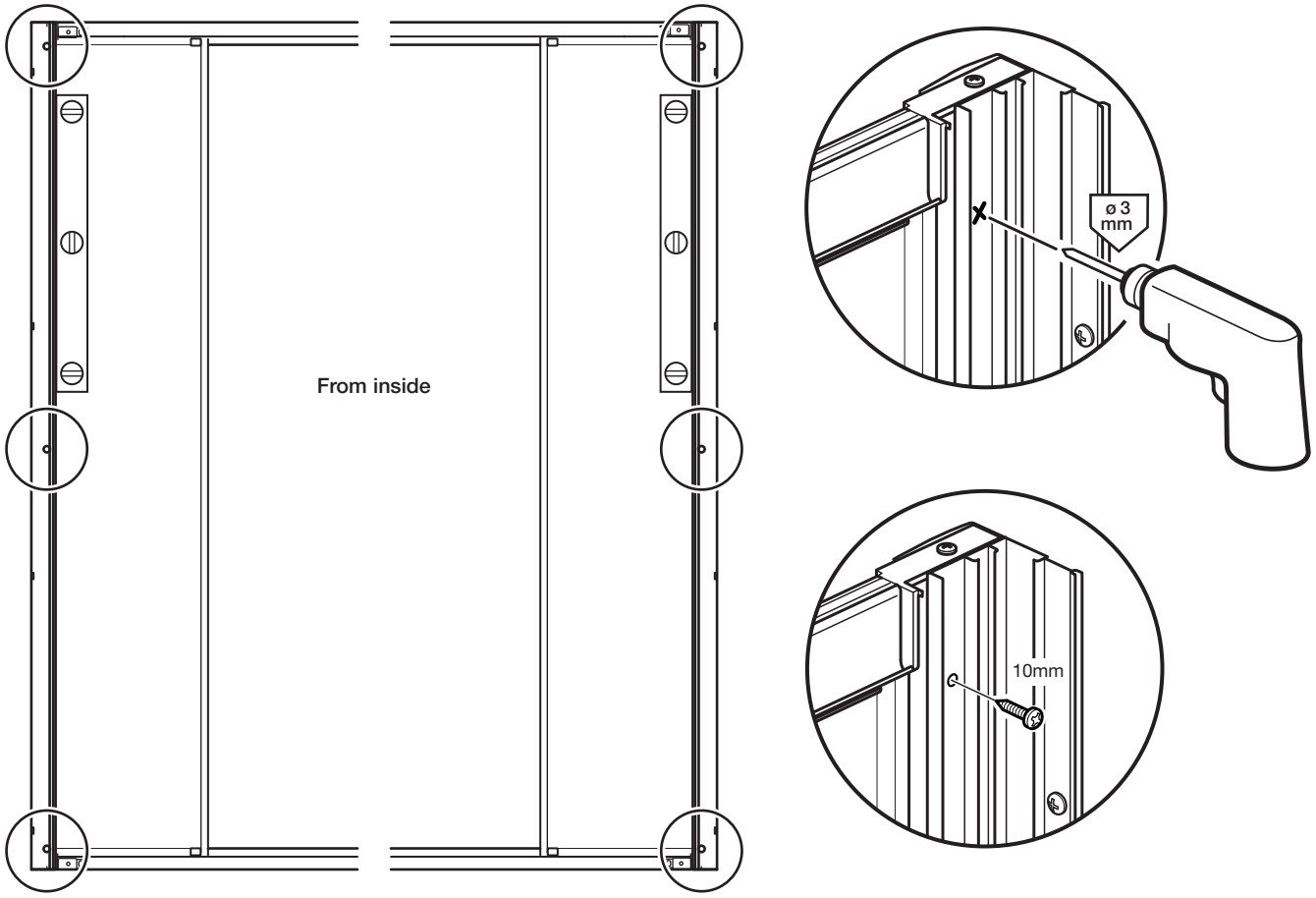

Check the enclosure is vertical and is centrally positioned between the wall channels.

From inside the enclosure, in the positions shown, drill through the wall channels into the fixed panels using a 3mm drill bit, **do not drill too deep!** Fix using 6 x 10mm screws.

9

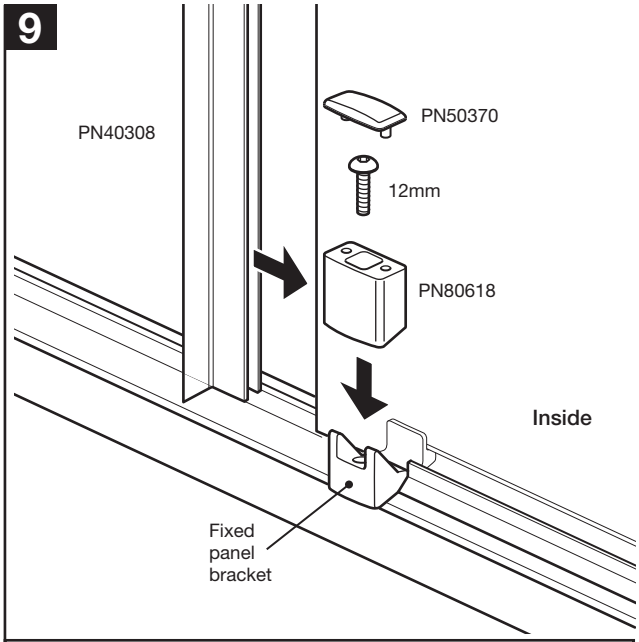

Fit 'flipper seals' (PN40308) onto the edge of the fixed panels. **Ensure the flipper seal 'flaps' are on the inside. Note:** Wetting the glass with water will help to fit the seals.

From inside the enclosure, place fixed panel retainer covers (PN80618) onto the top and bottom fixed panel brackets. Fix using the 12mm screws and fit the retainer caps (PN50370).

10

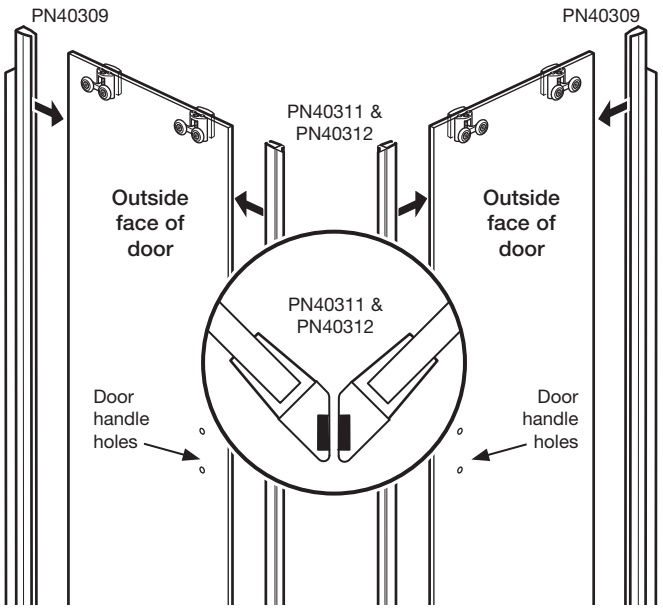

Push fit 'flipper seals' (PN40309) onto the back edge of the doors. **Ensure the flipper seal 'flaps' are on the outside of the doors.**

Push fit 'magnetic seals' (PN40311 & PN40312) onto the closing edge of the doors (the same side as door handle holes).

Note: Ensure the magnetic seals are positioned as shown.

Note: Wetting the glass with water will help fit the seals.

11

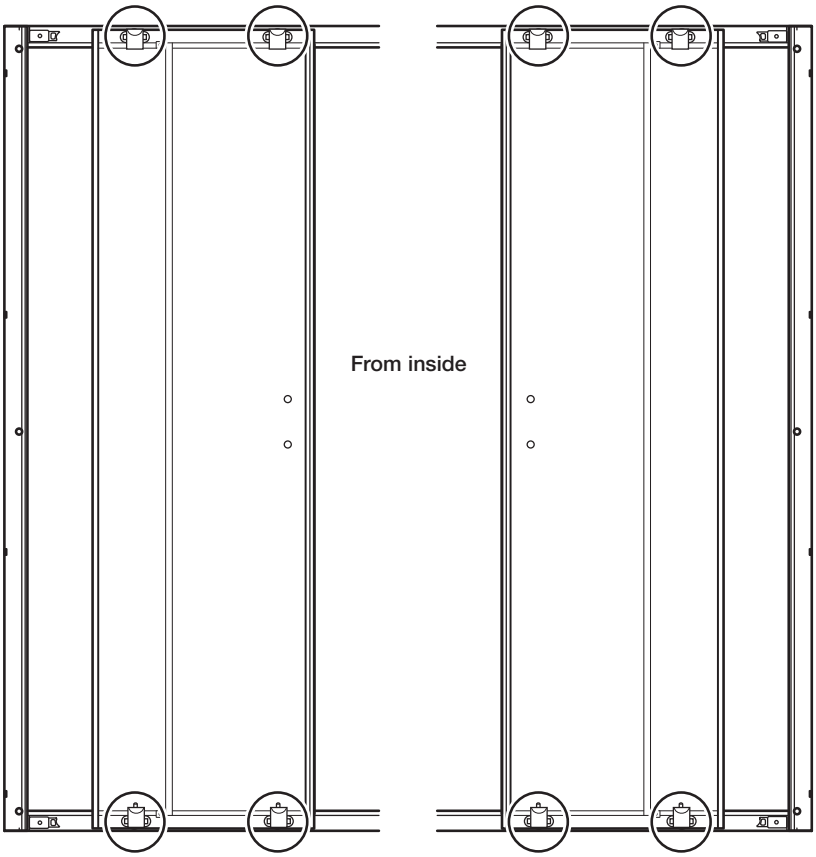

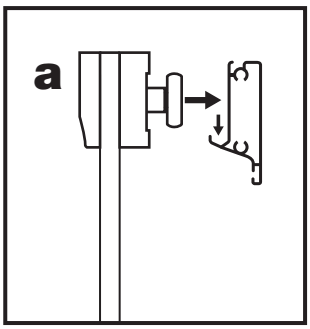

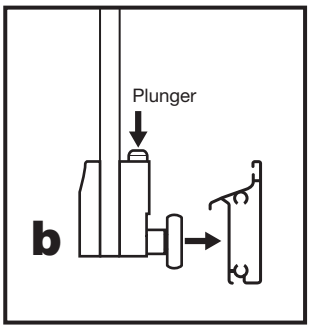

It is advised that this stage is carried out by two people to avoid damaging the runners, rails or doors.

a: From inside the enclosure, hang the top 'door rollers' onto the top rail 'runner' (ensure the magnetic seals are on inner edges).

b: From outside (with the doors closed) depress both 'plungers' on the bottom 'door rollers' and position under the bottom rail 'runner' and release the 'plungers'.

12

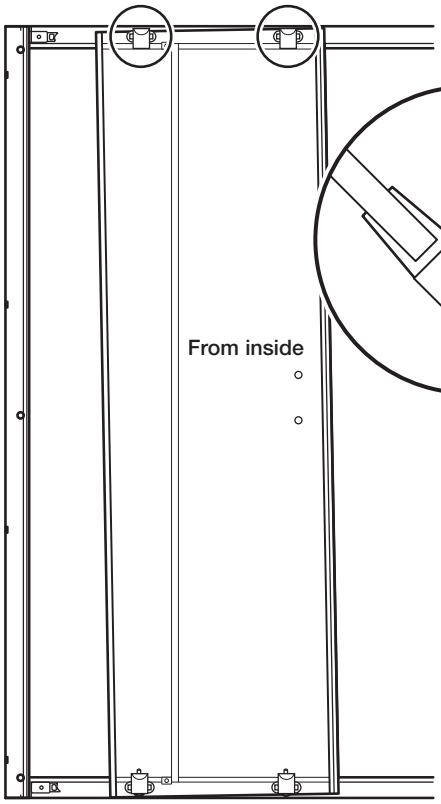

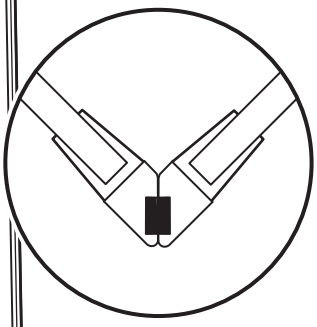

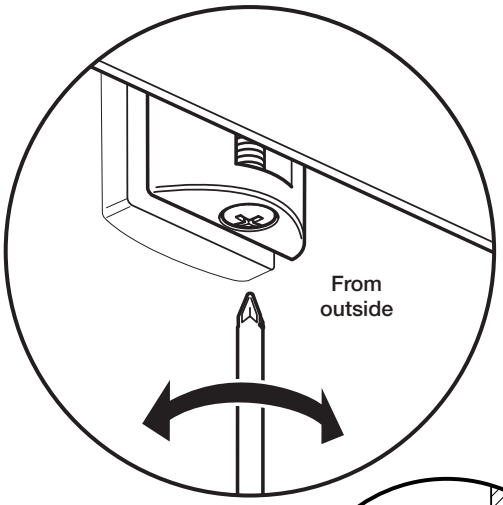

Ensure doors are adjusted so the bottom wheels are engaged in the bottom rail and they are under light tension but still free to run.

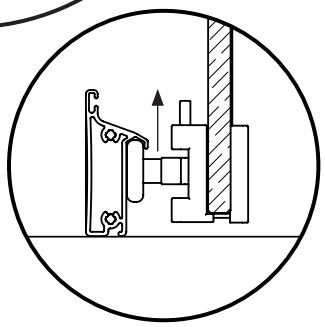

The 'wheels' at the top of the doors may need adjusting so that the doors slide freely and the magnetic seals meet evenly when the doors are closed.

From outside the enclosure, turn the adjuster screw (under each of the top wheels) as shown until the doors hang vertically.

13

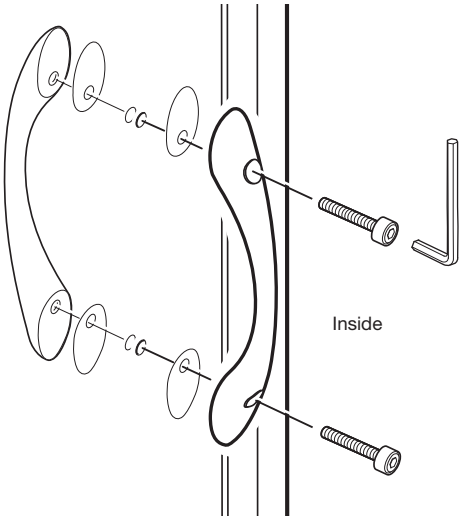

Fit the door handles to the doors with the allen bolts on the inside of the doors.

Ensure the rubber washers are placed between the handles and the glass.

Do not over tighten.

14

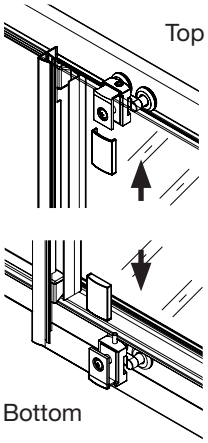

Slide the wheel cover caps (PN60490) on to the back of the wheels as shown from the inside of the enclosure.

15 **a**

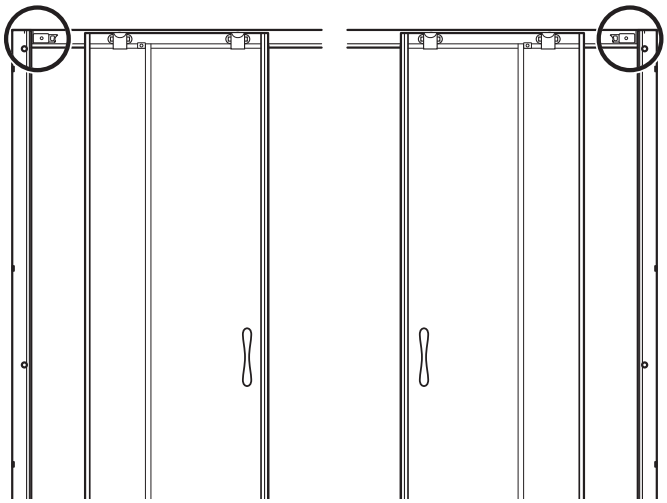

b

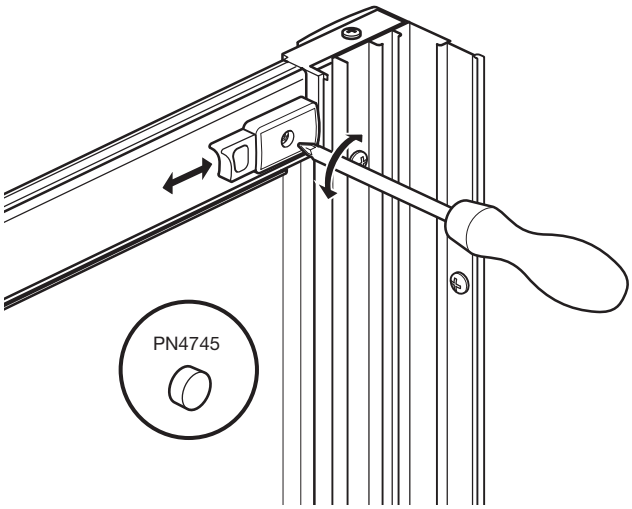

a: Check that the doors hit the top and bottom bumpers at the same time.

b: To adjust the bumpers, loosen the screw, move the 'rubber' bumper as required then re-tighten. Push fit cover caps (PN4745).

16 **a**

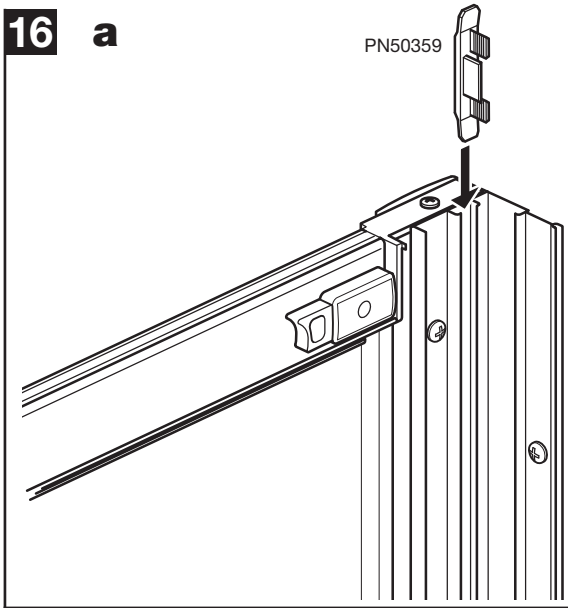

b

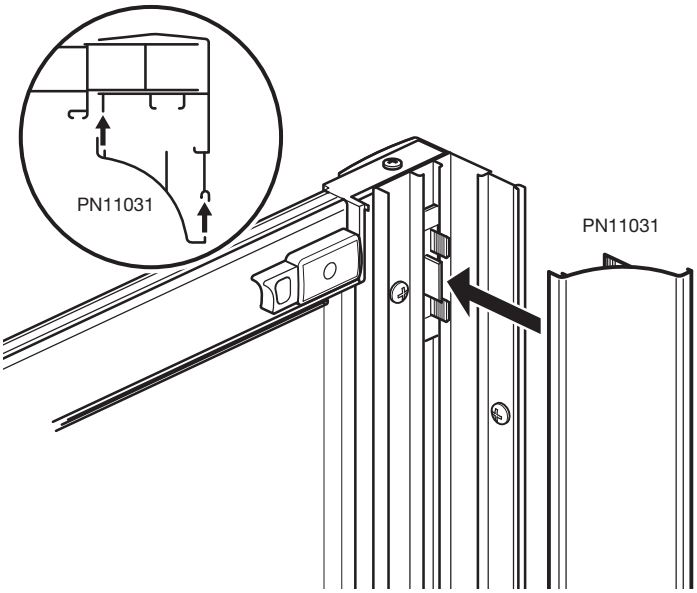

a: Insert 3 wall channel clips (PN50359) down the slot in each wall channel and space out equally down their length.

b: Push fit the wall channel cover strips (PN11031) onto the wall channels as shown.

17

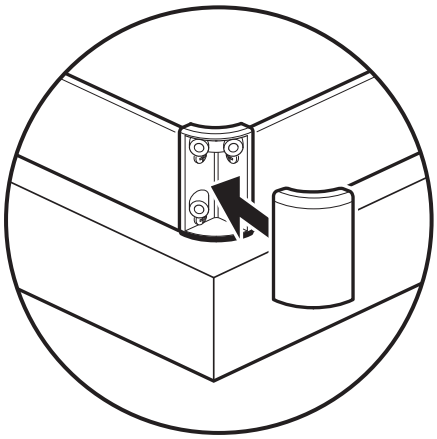

Push fit both corner cover caps (PN50290) onto the corner mouldings.

18

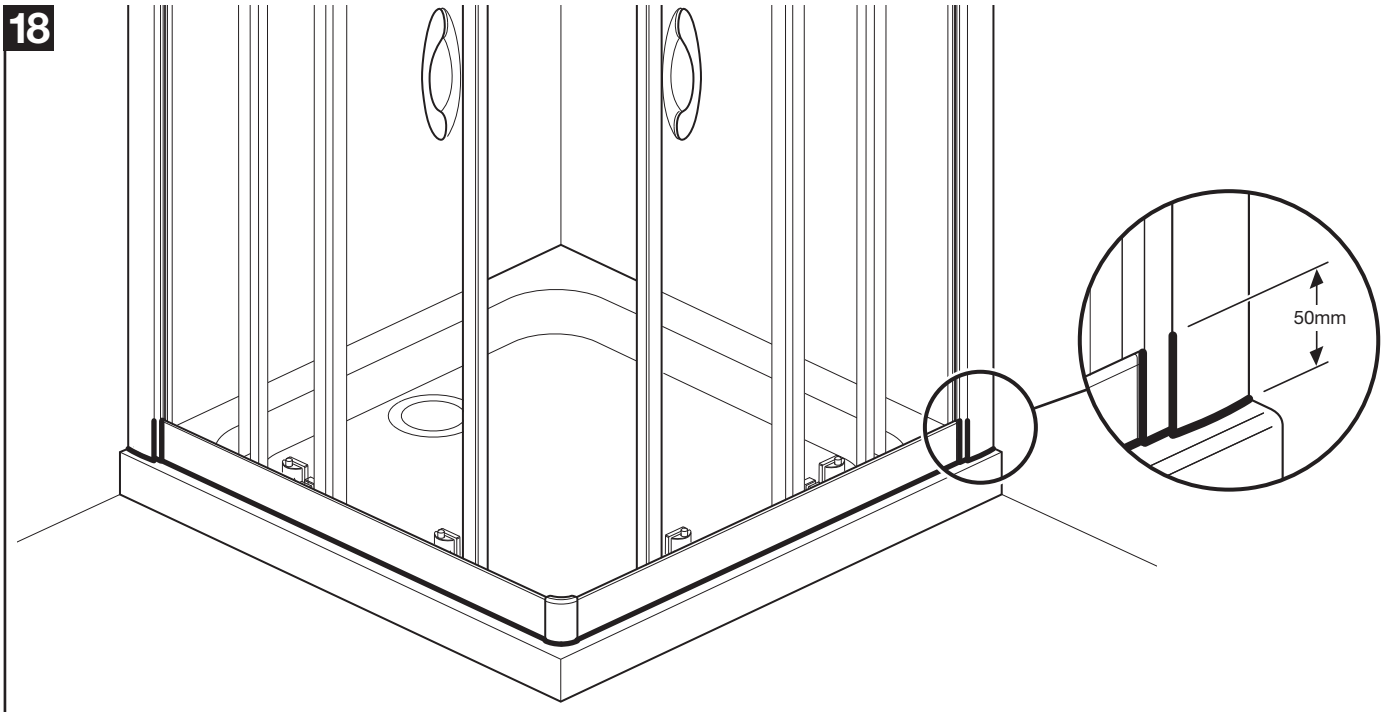

From the outside only, apply sealant to the bottom of the enclosure and 50mm up the wall channels and vertical joints as shown.

Recycling

Packaging:- The cardboard and polythene parts of this packaging can be recycled.
End of life:- This product contains materials such as aluminium and glass which can be recycled.
Please contact your local authority to find your nearest recycling centre.

IMPORTANT: You must not use the shower for 24 hours after installation of the enclosure.

DO NOT use bleach, scouring powders, solvents or other aggressive cleaning agents. To clean, use warm soapy water and a clean cloth and rinse off.

Please note: There has been a glass coating applied to this product, use a squeegee to remove water and debris.

Periodically check all fixings and tighten if necessary.

CORAM SHOWERS LTD
Stanmore Industrial Estate, Bridgnorth, Shropshire WV15 5HP, UK • Tel: 01746 766466 • Fax: 01746 764140 • www.coram.co.uk